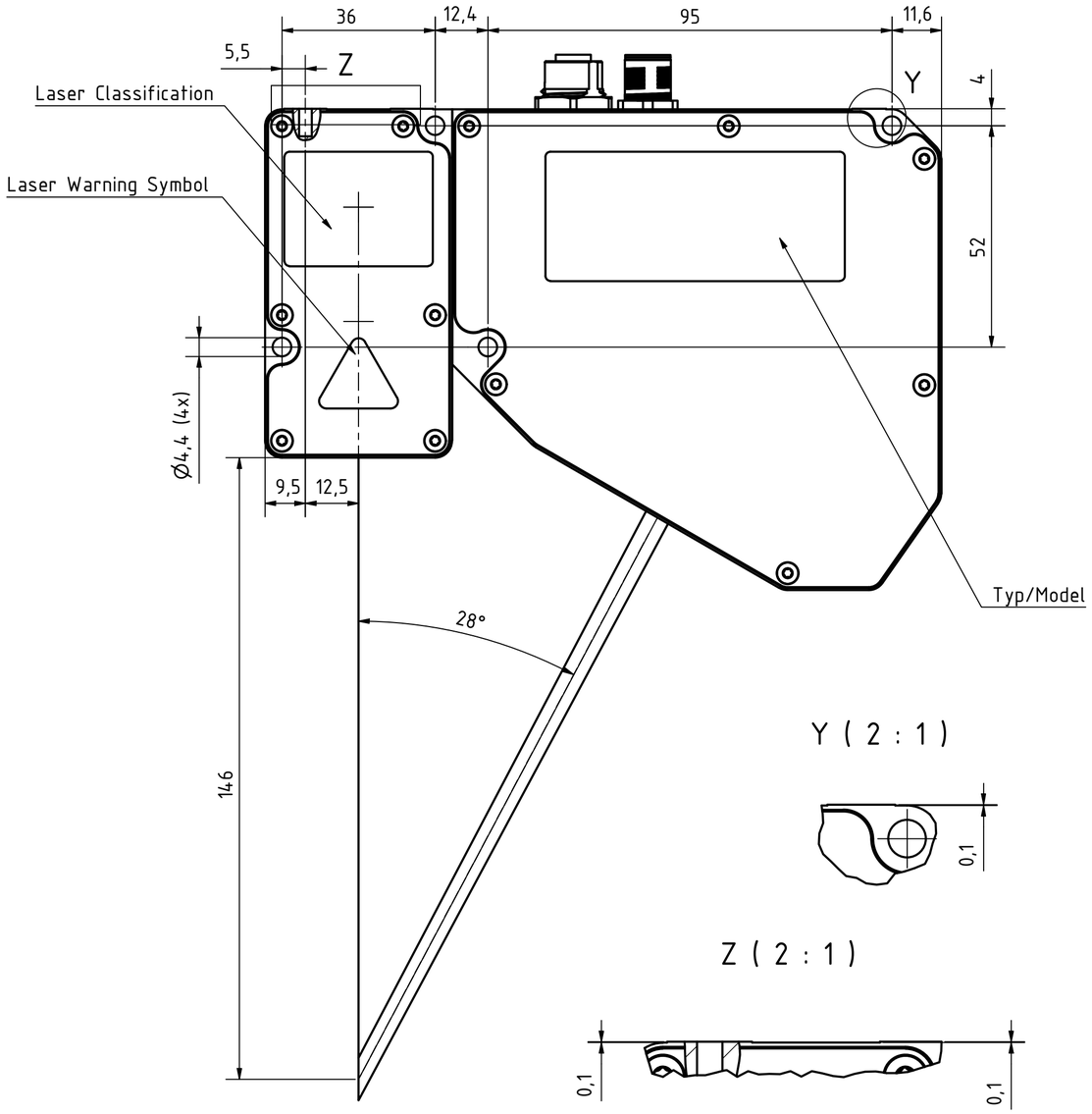

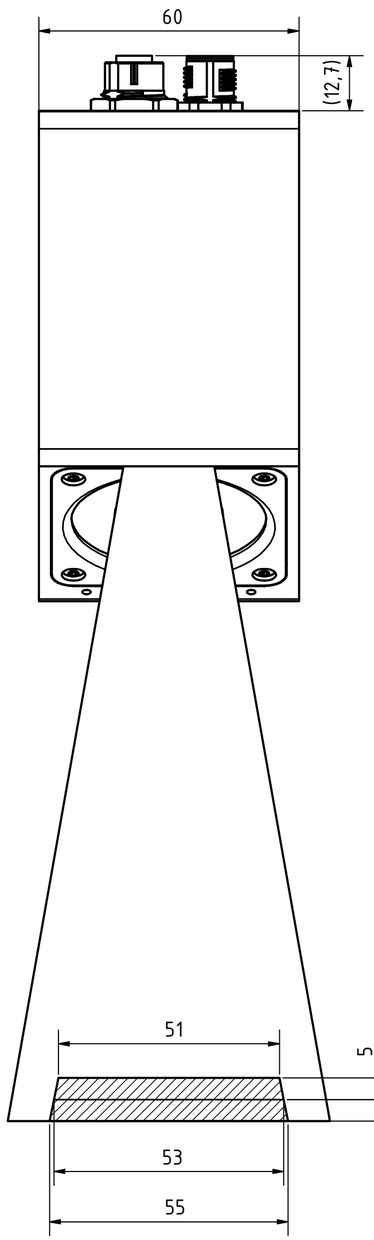

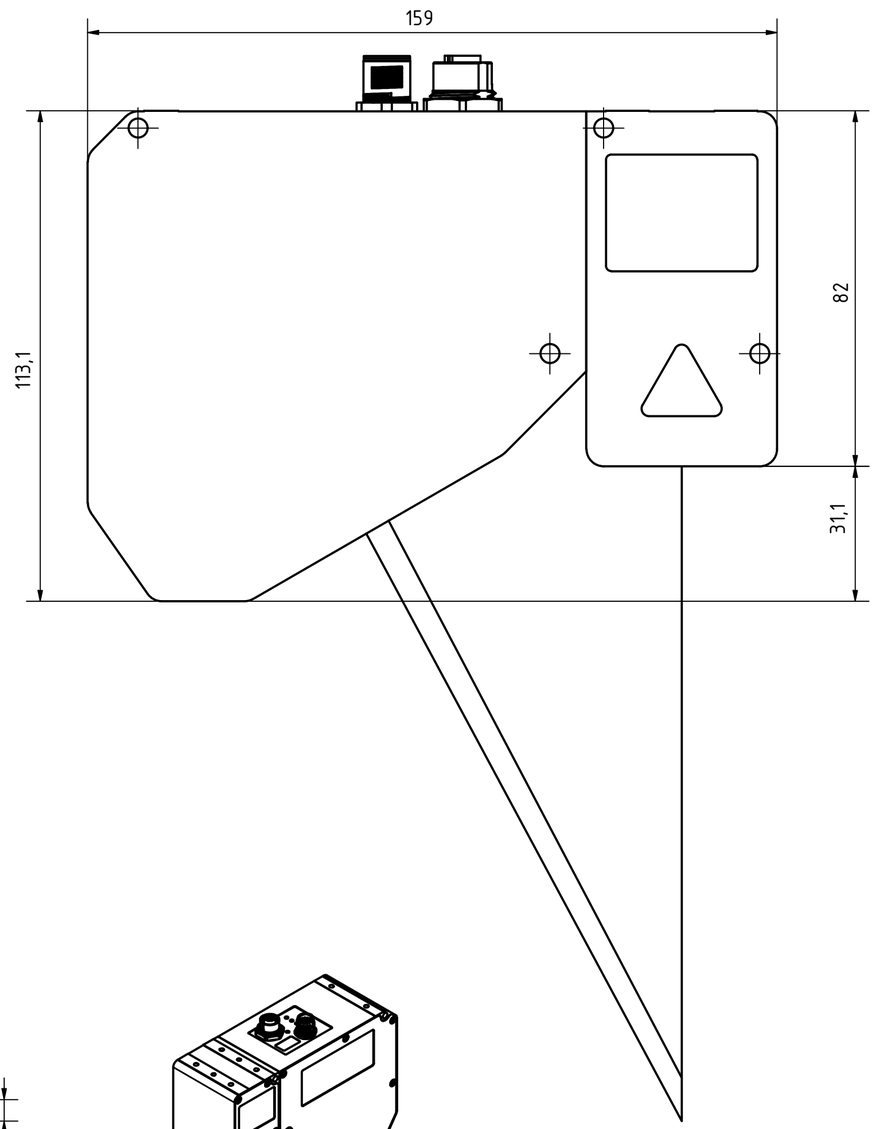

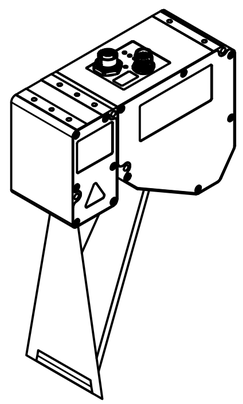

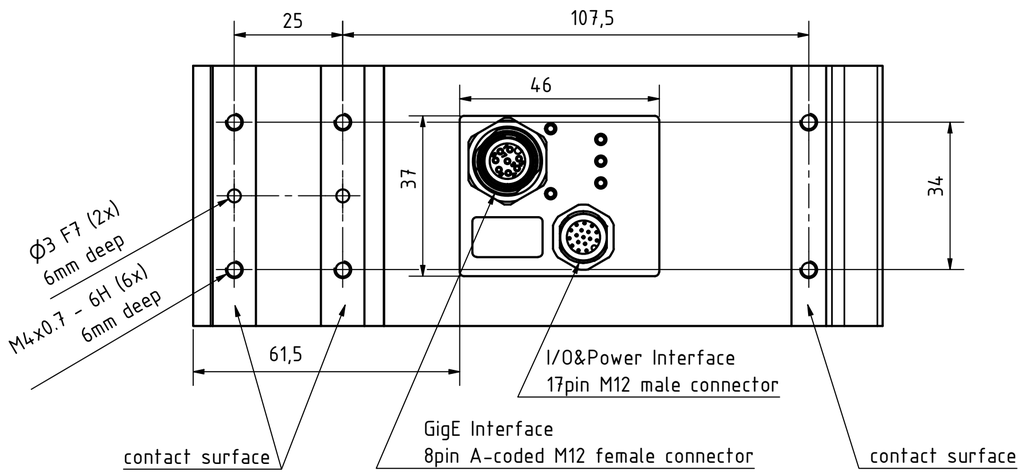

© Automation Technology GmbH 2021
Hermann-Bössow-Str. 6-8, 23843 Bad Oldesloe, Germany
Refer to protection notice ISO 16016

First Angle Projection

Projekt: XCS

	Datum	Name
Gezeichn	11.04.2024	SH
Kontroll		
Norm		

C6-S7-4090-XCS-28-53-146-SX-1G-405-3R_Public

Rev. 1

C6-S7-4090-XCS-28-53-146-SX-1G-405-3R_Public

1 / 1

A2

Scale 1:1

Status	Änderungen	Datum	Name